FERNO

CARING FOR THE PEOPLE WHO CARE

Neil Robertson Rescue Stretcher

Operation and Maintenance Manual

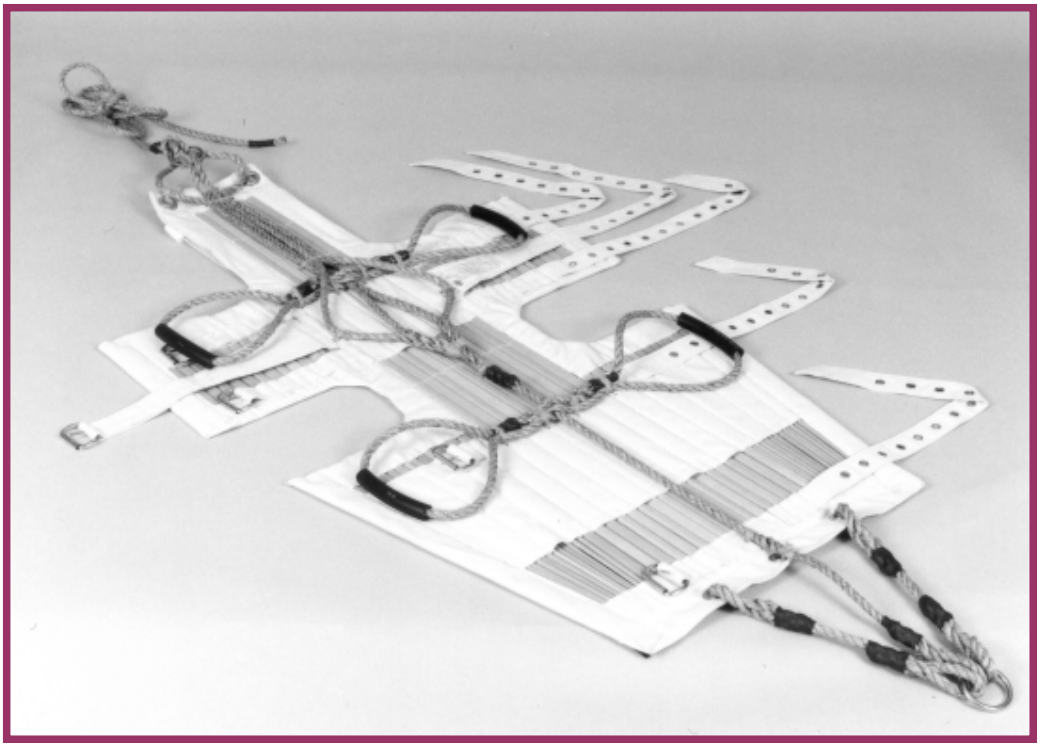

Contents

Section 1	**Introduction**	
	Introduction	1.1
	Precautions for Safety	1.1.1
	Operator Skills	1.1.2
	Operator Training	1.1.3
	General Principles	1.1.4
	Safety Alerts	1.1.5
	Warranty	1.6
	Limited Warranty	1.6.1
	Limitation of Liability	1.6.2
	Return Policy	1.6.3
	Customer Service	1.6.4
	Product Description	1.7
	Technical Specifications	1.8
	Accessories	1.9
	Unit Identification	1.10
	Pre-Service Checks	1.11
Section 2	**Principles of Operation**	
	Using the Neil Robertson Rescue Stretcher	2.1
	Further Operator Skills & Training	2.1.1
	Operating Guidelines	2.1.2
	Using Additional Help	2.1.3
	Storage	2.2
	Preparing the Stretcher for use	2.3
	Loading the Rescue Stretcher	2.4
	Lifting a Casualty to Safety	2.5
	Carrying the Stretcher	2.6
Section 3	**Routine Inspection & Maintenance**	
	Routine Inspection	3.1
	Cleaning	3.1.1
	Inspection	3.1.2
	Repair & Service	3.2
	Training Record	3.3
	Inspection Record	3.4
	Maintenance Record	3.5

PROPRIETARY NOTICE

The information and design disclosed herein are the property of Ferno (UK) Limited, a division of Ferno-Washington Incorporated. Ferno reserves all patent rights, proprietary design rights, manufacturing rights, reproducing use rights and sales rights thereto and to any articles disclosed therein, except to the extent that rights are expressly granted to others. The foregoing does not apply to vendor proprietary parts.

Specifications remain subject to change to allow the introduction of design improvements.

Disclaimer

This manual is not all-inclusive. Safe and proper use of this stretcher is solely at the discretion of the user. Safety warnings are included as a service to the user. All other safety measures taken by the user should be within and under consideration of the national, regional and local regulations and standards concerning usage. It is recommended that training of the proper use of this stretcher be provided before using the stretcher in an actual situation.

CE Marking

The CE symbol on Ferno (UK) products signifies that they have been certified in accordance with the Medical Devices Directive 93/42/EEC concerning Class 1 medical Devices.

CE

Section 1 Introduction

PREFACE

This manual has been prepared to provide general instructions for proper usage and maintenance of the Neil Robertson Rescue Stretcher.

Specific applications and operating techniques may vary from user to user. Ferno does not intend or recommend that this product be used for any purpose other than for which it is designed and outlined in this manual.

Any other use or application of this product becomes the complete responsibility of the owner/user.

Retain this manual for future reference and include it with the Neil Robertson Rescue Stretcher in the event of transfer to new owners/users.

1.1 Introduction

1.1.1 Precautions for Safety

To ensure safety and satisfaction with your Neil Robertson Rescue Stretcher, all users should read these instructions completely, as well as the individual portions of recognised emergency care manuals which relate to the application and use of rescue equipment.

1.1.2 Operator Skills

Minimum recommended skills are as follows:

- The strength, balance, co-ordination and common sense to safely operate the stretcher.
- The ability to select the proper equipment and procedures for the circumstances.
- Operators should have operator certification (or equivalent).
- The ability to understand and follow the procedures described in this manual.

1.1.3 Operator Training

Minimum recommended training is as follows:

- A training plan approved by a training officer (or equivalent).
- Read and understand the instructions in this manual.
- Practice using the fully equipped stretcher with weight and under simulated conditions.
- Trainees should be tested to verify their understanding of stretcher operation.

Keep training records. Annual refresher training for all stretcher operatives is recommended.

1.1.4 General Principles

When moving casualties, always inform them of what you are going to do.

Always follow good lifting procedures as specified in the current manual handling regulations and your appropriate training manual.

Medical advice is beyond the parameters of this manual. It is the user's responsibility to ensure safe practices for the patient and themselves.

Placement techniques, heavy patients, rough terrain or unusual circumstances may require more rescuers.

WARNING

Only qualified personnel trained in the use of the Neil Roberson Rescue Stretcher should use it.

Never exceed the maximum load capacity.

Every individual who may use the Neil Robertson Rescue Stretcher should practice using it to become familiar with the procedures before placing it in service.

Improper lifting can cause injury. Always use recognised lifting techniques.

1.1.5 Safety Alerts

Safety alerts identify potential hazards to avoid. The following safety alerts appear in this manual:

WARNING
Only qualified personnel trained in the use of the Neil Robertson Rescue Stretcher should use it. Never exceed the maximum load capacity. Every individual who may use the Neil Robertson rescue Stretcher should practice using it to become familiar with the procedures before placing it in service. Improper lifting can cause injury. Always use recognised lifting techniques. Leg and ankle securing is essential if the casualty is to be suspended at all.

WARNING
Stretcher misuse can cause injury. Do NOT let helpers control the Stretcher. Emergency/rescue personnel should maintain control and advise helpers how to assist handling the Stretcher. Improper maintenance can cause injury and reduce the integrity of the stretcher. Maintain the Neil Robertson Rescue Stretcher only as described in this manual. Ensure the hoisting rope is adequate. Use 14mm diameter manila rope. Do NOT use the rope fastened to the head section for suspension purposes.

1.6 Warranty

1.6.1 Limited Warranty

Ferno (UK) Limited, warrants the products we manufacture to be free from material or workmanship defects for one year except as follows:

(A) External finishes (gelcoat, decals, paint etc.) are warranted for 90 days.
(B) Soft goods (webbing, vinyl, fabric, foam etc.) are warranted for 90 days.
(C) Repairs and services are warranted for 90 days or until the end of the time period(s) above, whichever comes last.

This limited warranty applies when you use and care for the product properly. If the product is not used and cared for properly, the warranty is void. The warranty period begins the day the product is shipped from Ferno or the day you receive it if you have proof of the delivery date. Shipping charges are not covered by the limited warranty. We are not liable for shipping damages or damages sustained through using the product. If a defect is found after the product has been placed in service, DO NOT return it to Ferno. Contact your distributor or Ferno Internal Sales for replacement information.

1.6.2 Limitation of Liability

If a product or part is proven to be defective, Ferno will repair or replace it. At our option, we will refund the product's purchase price. In no event is Ferno liable for more than the selling price of the product. The purchaser accepts these terms in lieu of all damages.

Except for the limited warranty above, Ferno makes no other warranties, either expressed or implied. Ferno makes no implied warranties of merchantability and fitness for a particular purpose. In no event will Ferno be liable for any indirect or consequential damages sustained in connection with the delivery, use, or performance of its products.

Any legal action for breach of the limited warranty must be filed within one year of the date the breach of warranty is or should have been discovered.

1.6.3 Return Policy

No Product will be accepted without prior approval by Ferno. Merchandise accepted for repair or replacement will be evaluated against established criteria, including age and condition of the product and expected length of time to repair that product, as well as its ability to meet current industry standards. If repairable, an estimate will be provided to the customer before work begins. A cleaning charge may apply to returned products. Your Ferno Internal Sales Representatives will be happy to assist you.

1.6.4 Customer Service

If you have any questions or need assistance with your Ferno equipment, contact our Internal Sales Department:

Ferno (UK) Limited,
Stubs Beck Lane,
Cleckheaton,
West Yorkshire,
BD19 4TZ
Telephone.... +44 (0) 1274 851999
Fax..... …+44 (0) 1274 851111
e-mail: service.uk@ferno.com

Please have the product serial number ready when contacting our Internal Sales Department.

The serial number is located on the bottom of the 'Instructions for Use' label on the right hand side middle chest-restraining strap (please see diagram on the next page).

1.7 Product Description

The Neil Robertson is a well-proven Rescue Stretcher, which allows the simple and safe recovery of a patient from difficult or unconventional situations. The Neil Robertson is designed for use in instances where a casualty needs to be lowered or lifted to safety. Constructed from spliced ramin slats with a tough, rot proof 18oz cotton exterior. Four heavy duty carrying handles assist in all manoeuvres, whilst cotton straps with buckles and eyelets and a head restraint secure the casualty in place. Durable manila support ropes enhance rescuer confidence. An optional carrying bag provides convenient storage for the stretcher when not in use.

A 2 metre length is also available.

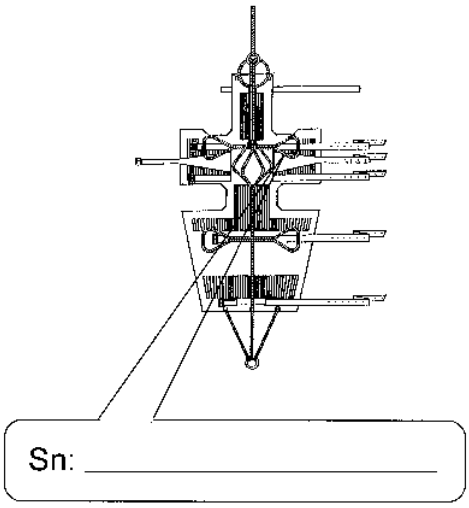

Serial Number _____

1.8 Technical Specifications*

	Length (cm) Open / Folded	Width (cm) Open / Folded	Height (cm) Open / Folded	Weight (Kg)
Neil Robertson Stretcher Standard Length	150/150	100 / 31	4 / 180	8 Kg.
Neil Robertson Stretcher 2 Metres Length	1.630 / 1.630	950 / 310	4 / 180	8.5 Kg.
Maximum Load Capacity=				136 Kg.

* *All dimensions are approximate.*
† *Load limit is total weight distributed in accordance with basic human anatomy proportions. Users must consider the weight of the patient, equipment and accessories when determining the total load on the Neil Robertson rescue Stretcher. Ferno reserves the right to change specifications without notice.*

1.9 Accessories

Standard accessories include a carrying bag for the convenient storage of the storage of the Stretcher when not in use.

For further information contact Ferno (UK) Ltd Internal Sales Department at the address shown on Section 1.6.4.

1.10 Unit Identification

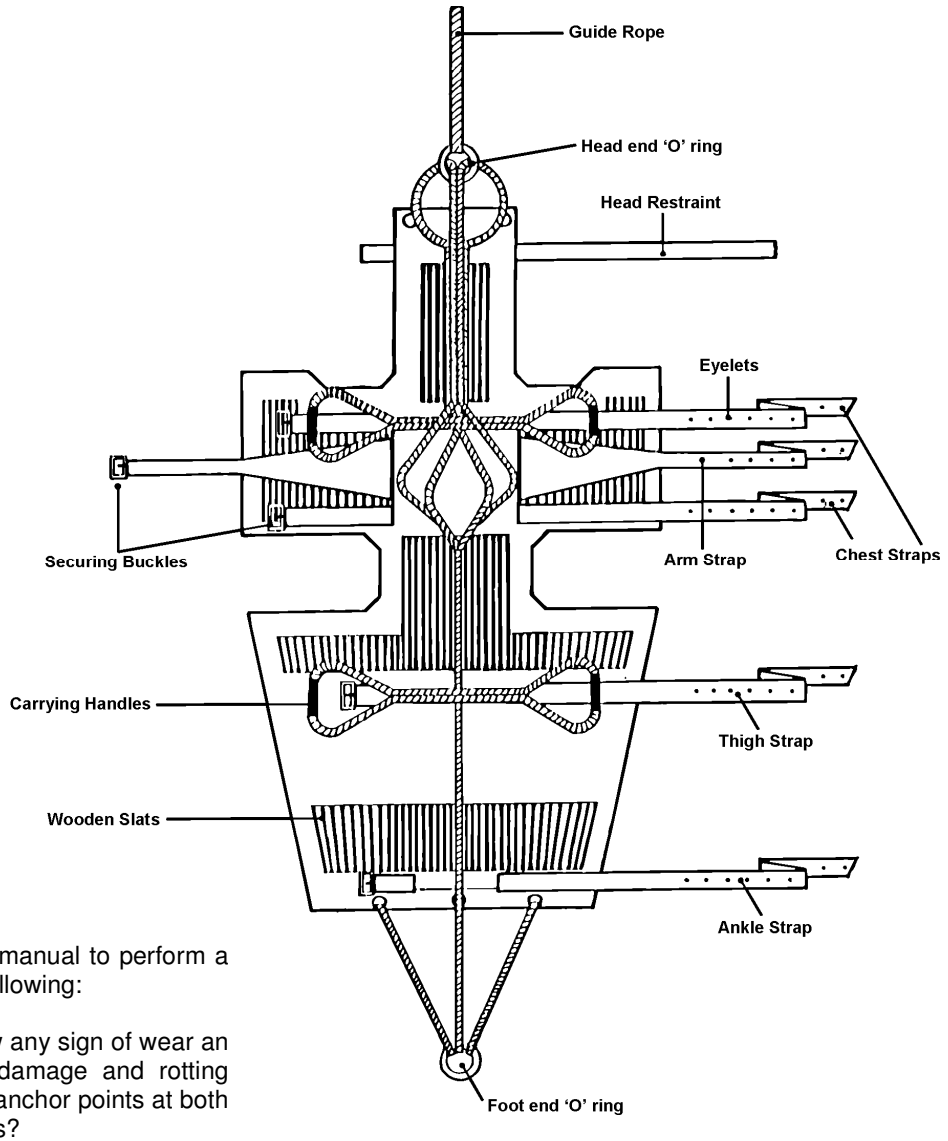

1.11 Pre-Service Checks

Refer to Section 3 of this manual to perform a pre-service check of the following:

- Does the canvas show any sign of wear an tear including water damage and rotting especially around the anchor points at both the foot and head ends?
- Does the rope show any sign of deterioration?
- Do the head strap, restraining straps and eyelets have any cuts, tears or damages parts?
- Do the securing buckles fasten correctly?
- Are there any broken wooden slats?
- Are the O-Rings distorted?

After satisfactorily completing the pre-service check, the Neil Robertson Rescue Stretcher is ready to use in regular service.

Section 2 Principles of Operation

2.1 Using the Neil Robertson Rescue Stretcher

2.1.1 Further Operator Skills and Training

- Operators need the ability to use the Rescue Stretcher as instructed in this manual.
- Operators need the ability to assist the casualty.
- When moving casualties an EMS training officer or medical advisor needs to approve the training programme.
- Trainees need to read this manual as part of the training programme.
- Trainees need to be tested on Rescue Stretcher operation before they use the Stretcher.
- Operators should practice using the Rescue Stretcher before using with a casualty.

2.1.2 Operating Guidelines

- Inform the casualty before moving or lifting the Rescue Stretcher.
- Stay with the casualty and control the Rescue Stretcher at all times.
- Keep the casualty restrained when using the Rescue Stretcher.
- Use help when needed to ensure casualty and emergency/rescue personnel safety.

2.1.3 Using Additional Help

Two trained emergency/ rescue personnel are needed to effectively use the Rescue Stretcher. When using additional help, emergency/rescue personnel should maintain control of the Stretcher while directing helpers.

Keep the load limit of the Stretcher in mind throughout all procedures. Take care when working with very heavy casualties.

WARNING
Stretcher misuse can cause injury. Do NOT let helpers control the Stretcher. Trained operators should maintain control and advise helpers how to assist handling the Stretcher.

WARNING
Improper lifting can cause injury. Always use recognised lifting techniques.

2.2 Storage

This Rescue Stretcher should be stored in a cool, dry place out of direct sunlight and damp conditions. Ideal storage options include a protective cabinet or Neil Robertson Carrying Bag to keep the Stretcher canvas free from deterioration.

2.3 Preparing the Stretcher for Use

Remove the Neil Robertson from the carrying bag (if applicable) and lay on the ground with the canvas side facing upwards (marked 'head', 'inside' and 'foot'). Place Neil Robertson alongside the casualty. Unfasten the guide ropes, head strap and restraining straps. The Stretcher is now ready for use. See Figure 1.

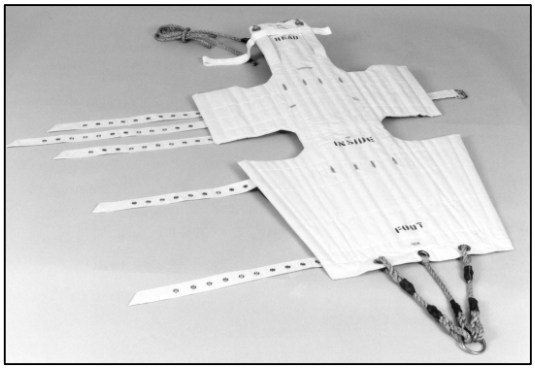

Figure 1

2.4 Loading the Rescue Stretcher

Using recognised patient handling techniques position the casualty on the Neil Robertson.

Ensure the forehead is level with the head restraint and fasten in position using the velcro strap. See Figure 2.

Figure 2

Secure the casualty on the Stretcher by fastening the upper and lower chest straps. Locate the casualty's arms inside the centre strap and fasten (if the body is not wrapped in a blanket). See Figure 3.

Figure 3

Fasten leg and ankle straps securely with the casualty's feet positioned in the rope stirrups. See Figure 4.

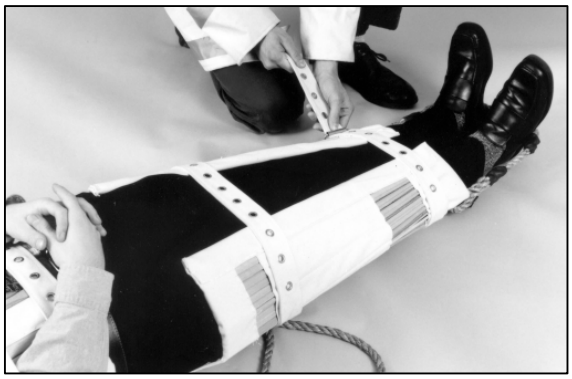

Figure 4

WARNING
Leg and ankle securing is essential if the casualty is to be suspended at all.

Check all the straps are securely fastened and tighten as necessary. The casualty is now ready for evacuation.

2.5 Lifting a Casualty to Safety

Use recognised hoisting and lifting techniques to suspend the casualty.

Note the rope supplied with the Neil Robertson is designed for guiding only. When suspending a casualty ensure you use a rope specifically designed for that purpose.

When preparing for a vertical lift, first securely fasten the hoisting rope to the foot end 'O' ring,

WARNING
Do NOT use the guide rope supplied with the Neil Robertson for suspension purposes. Ensure the hoisting rope is specifically designed for hoisting casualties.

2.6 Carrying the Stretcher

Use the four heavy-duty carrying handles for conventional carrying purposes. See Figure 5. Poles or ropes may be passed through the handles loops to make carrying easier.

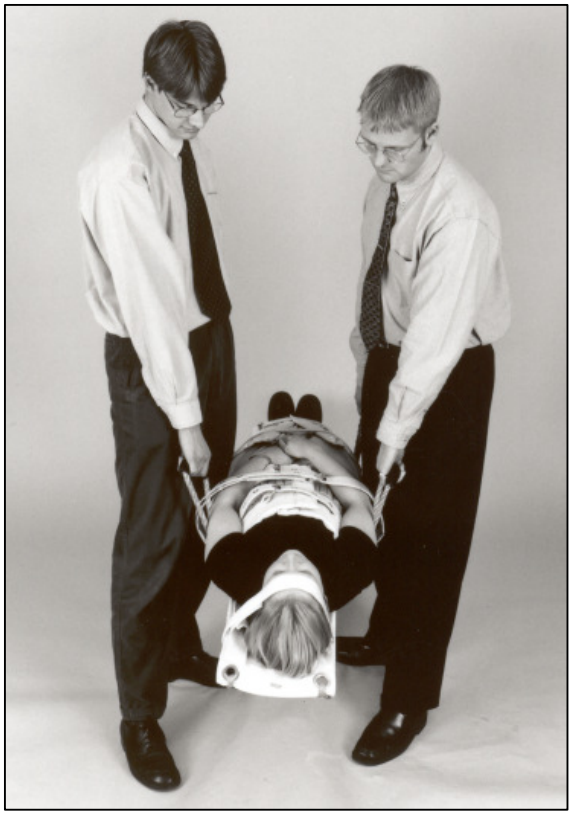

Figure 5

Section 3 Routine Inspection and Maintenance

3.1 Routine Inspection

The Neil Robertson Rescue Stretcher required regular inspection to maintain the safety and performance of the Stretcher. Clean and inspect the Stretcher as described in this Section.

3.1.1 Cleaning

After use:

1. When the canvas is dry, use a stiff bristled brush to remove any surface dirt.

2. DO NOT clean with chemicals.

3. DO NOT soak in water as this will rot the wooden slats unless the Stretcher has been immersed in salt water. In which case soak in fresh water for up to 2 hours. Rinse in several changes of fresh water and allow to dry naturally.

3.1.2 Inspection

Have the appointed maintenance person follow the schedule below and inspect the Stretcher every 3 months and/or after each rescue operation.

- ❑ Clean the stretcher prior to inspection (see 3.1.1. above).
- ❑ Inspect the canvas for signs of wear and tear including water damage and rotting, especially around the anchor points at the foot and head ends.
- ❑ Check the large eyelets at the foot and head sections are not damaged.
- ❑ Check all restraining straps and eyelets for cuts, tears or damaged parts. Ensure the buckles engage in the eyelets correctly.
- ❑ Ensure all anchor points for the rope harness are secure at both the head and foot ends and all fixings are properly fastened from top to bottom.
- ❑ Inspect all rope for any sign of deterioration such as cuts and frayed parts.
- ❑ Check all wooden slats to ensure none are broken.
- ❑ Check the O-Rings at both the head and foot end for distortion.

3.2 Repair and Service

WARNING
Improper maintenance can cause injury and unpredictable operation. Maintain the Neil Robertson Rescue Stretcher only as described in this manual.

A damaged Stretcher should be withdrawn from service and returned **immediately** to Ferno (UK) Limited for repair.

Contact Ferno (UK) Internal Sales Department on:
Telephone..... +44 (0) 1274 851999
Fax..... +44 (0) 1274 851111

3.3 Training Record

	Training Date		Training Method
Trainee Name	**Basic Training**	**Refresher Update**	**Owner's Manual, In-Service, Formal Class, etc.**

3.4 Inspection Record

Date	Inspection Operation Performed	By

3.5 Maintenance Record

Date	Maintenance Operation Performed (Reason for maintenance if necessary)	By

Ferno (UK) Ltd
Ferno House, Stubs Beck Lane, Cleckheaton, West Yorkshire, England, BD19 4TZ
Tel: + 44 (0) 1274 851999 Fax: + 44 (0) 1274 851111
e-mail: service.uk@ferno.com

Stock Code: 2003-0032